ARCO

112319

Deck mounted bath mixer with 852 mm floor mounted spout

Chrome	112319
Matt Black	B112319
Brushed Nickel	S112319
Polished Gold	G112319
Crude	K112319

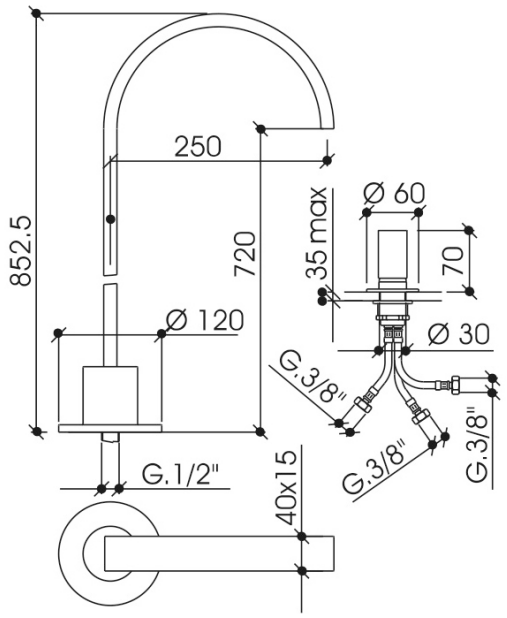

COMPONENTS

Deck mounted mixer

Chrome	112300/19C
Matt Black	B112300/19C
Brushed Nickel	S112300/19C
Polished Gold	G112300/19C
Crude	K112300/19C

Floor mounted 852 mm bath spout

Chrome	112331/29C
Matt Black	B112331/29C
Brushed Nickel	S112331/29C
Polished Gold	G112331/29C
Crude	K112331/29C